PART NO.
DCAE-614

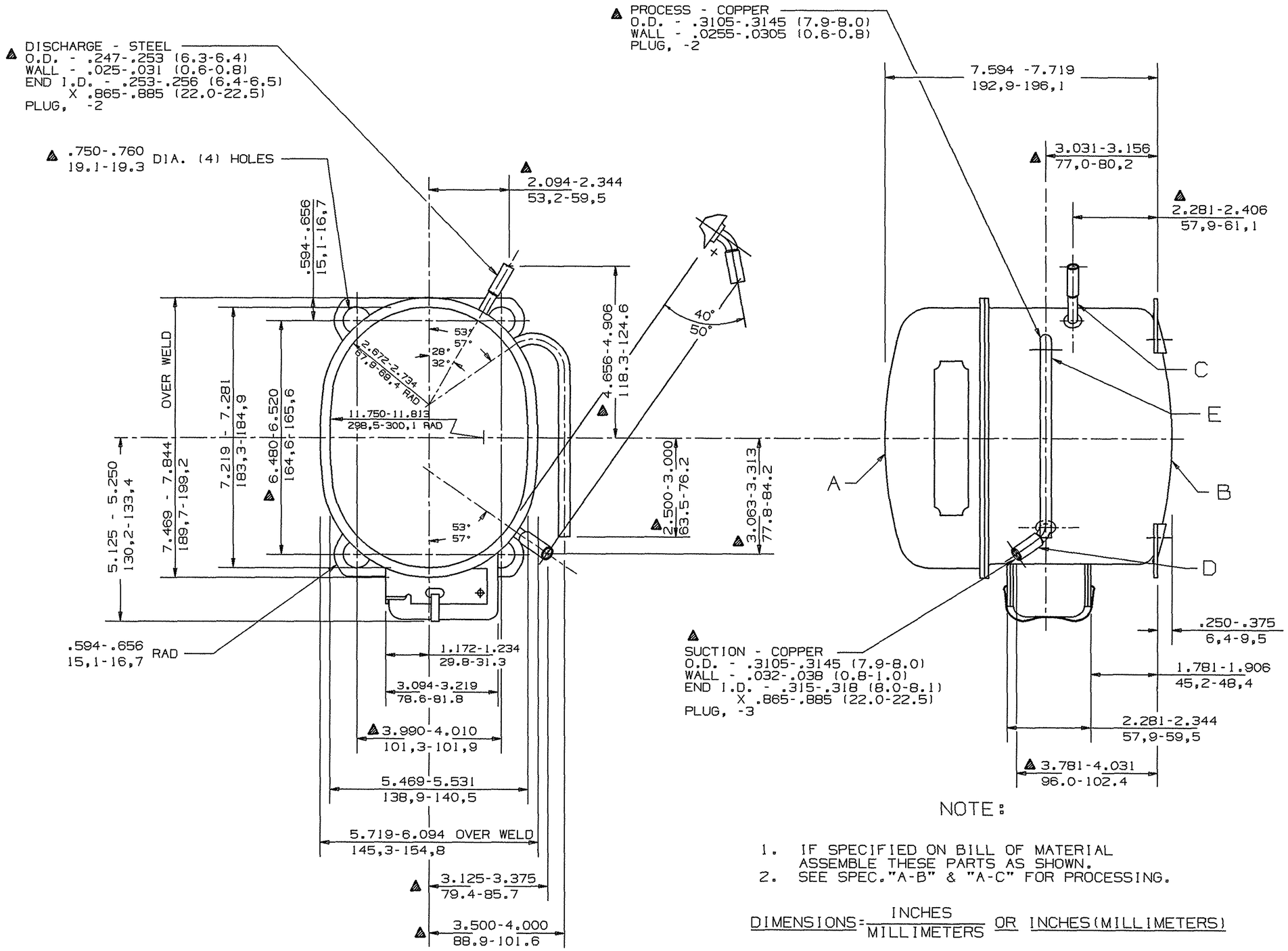

NOTE:

1. IF SPECIFIED ON BILL OF MATERIAL ASSEMBLE THESE PARTS AS SHOWN.
2. SEE SPEC."A-B" & "A-C" FOR PROCESSING.

DIMENSIONS = INCHES / MILLIMETERS OR INCHES (MILLIMETERS)

Q.A. SYMBOLS
✱ = CATEGORY I
▲ = CATEGORY II
▨ = CATEGORY III
= CATEGORY IV

AE

A	32095		HB 1/23/90	Q.A. SYMBOLS ADDED #221145	—
B	HA531-12		HB 4-9-86	PROCESS TUBE RELOCATED TO HORIZ. POS. #213768	-
C	34358-2		HB 4-9-86	REDRAWN NO CHANGE #212377	—
D	34575				
E	34442				
			DATE	CHANGE	LT LC

THIS DRAWING IS THE PROPERTY OF TECUMSEH PRODUCTS COMPANY (TECUMSEH) AND CONTAINS INFORMATION BELONGING TO TECUMSEH. IT IS LOANED TO THE RECIPIENT AND ACCEPTED BY THE RECIPIENT SUBJECT TO THE SPECIFIC CONDITION THAT NEITHER IT NOR THE INFORMATION CONTAINED THEREIN OR DISCLOSED THEREIN SHALL BE USED WITHOUT THE EXPRESS AND SPECIFIC WRITTEN CONSENT OF TECUMSEH, AND THAT NEITHER IT NOR THE INFORMATION CONTAINED THEREIN SHALL BE COPIED OR IMPLICATED IN ANY MANNER TO ANYONE WITHOUT TECUMSEH'S PRIOR EXPRESS AND SPECIFIC WRITTEN CONSENT. UPON TECUMSEH'S WRITTEN REQUEST, THE RECIPIENT SHALL RETURN THE DRAWING AND ALL COPIES THEREOF TO TECUMSEH AT THE ADDRESS SHOWN ON THE FACE HEREOF SUCH REQUEST IS MADE.

DIS. CODE 34D

DO NOT SCALE THIS DRAWING ALL FERROUS MATERIAL MUST NOT BE MAGNETIZED AS RECEIVED OR AT COMPRESSOR ASSEMBLY.

NAME: SALES COMPRESSOR

DWN.	CK.	APR.	SCALE
BRODERICK 4-9-86	M TRUGHET 1-26-90	BLANDEN	1"=2"

THIS PRINT SUPERSEDES ALL PRINTS PRIOR TO

TECUMSEH PRODUCTS CO.
TECUMSEH, MICHIGAN

MATERIAL: NOTED

INTERNAL USE ONLY
©UGIIDISK1:BRODERICK:AE-DCAE-614.REVM.PRT

PART NO. DCAE-614